File trimless recessed

code F1102.830X/01

PRODUCT DESCRIPTION

Direct trimless recessed indoor lamp in extruded aluminum 6060, complete with led; color rendering index CRI >90. Professional led 25.6 W modules assembled and wired on extruded aluminum heatsink with high performance reflector, equipped with harmonic steel springs for installation in the profile Tools free; wiring through 5 cables with quick coupling terminal blocks; protocol On/Off; polycarbonate with diffusing film. Protection rating IP40/IP43.

PRODUCT SPECS

Installation method	Trimless recessed
Light source	LED
Absorbed power	25,6 W
Color temperature	3000K
Color rendering index CRI	>90
Optic	Microprismatic diffuser
Finishing	White
Luminous flux of the product	1928 lm
Luminous efficiency	75 lm/W
MacAdam color tolerance	3
Life time estimate	50000h Ta 25° L80B10
Protocol	On/Off
Energy efficiency class	E
Weight	1.80 Kg
Dimension	L1140 mm
Hole size	42XL+2 mm
IP Grade	Inst. Parete Ip40 / Inst. Soffitto Ip43
Power supply	220-240V 50-60Hz

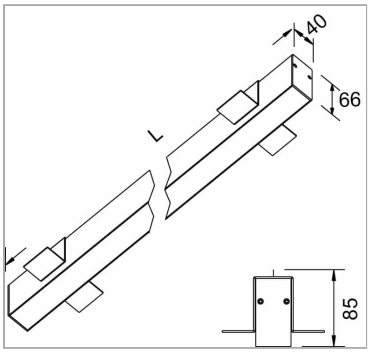

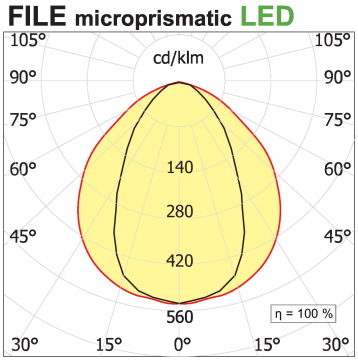

WEB PAGE

ASSEMBLY INSTRUCTIONS

Complies with EN605981 and related notes. In the absence of metric symbols, the measurements are all in millimetres.
Luminous flux and power data are initially subject to tolerances +/- 10%. The values refer to an ambient temperature of 25°C unless otherwise specified.
We reserve the right to make changes to our products at any time.

LUCIFERO'S SRL with sole shareholder - via del Tappezziere, 3 - 40138 Bologna - Italy - +39 051 6014276 - assistenza@luciferos.it - customercare@luciferos.it

OPTIONAL ACCESSORIES

Couple of closure heads 40 mm

code LT2480.1

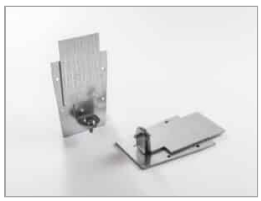

Modular system for direct, diffused and/or accent lighting, consisting of hollow profiles made from 66x40 mm painted or anodised extruded aluminium, with a predefined length or cut to measure, available in the following versions: wall-mounted, ceiling-mounted, suspended ,recessed with a super-slim edge trim, just 5 mm wide (61.5 x 40 mm) and trimless recessed. To be integrated with LED linear light sources, battens for T16 fluorescent lamps, projectors with built-in LED source and max 16A 3-circuit track modules for inclusion of projectors. Fluorescent battens, complete with 50/60 Hz 230/240 V electronic power supply, LED batten driver included. To be completed with side end caps with Light Proof system, opal white or microprismatic PC diffusing screen (in accordance with EN 12464-1), closing profiles, with a predefined length or cut to measure, or dark-light aluminium grille with high specular qualities and mounting brackets or suspension cables. IP40 protection rating.

Technical Sheet

LUCIFERO'S SRL with sole shareholder - via del Tappezziere, 3 - 40138 Bologna - Italy - +39 051 6014276 - assistenza@luciferos.it - customercare@luciferos.it